YASKAWA

YASKAWA Energy-Saving Unit

Power Regenerative Unit

R1000

200 V Class, 3.5 to 105 kW
400 V Class, 3.5 to 300 kW

R

Certified for
ISO9001 and
ISO14001

JQA-QMA14913 JQA-EM0202

Energy Is Generated!

Even During Operation

Machines actually generate energy.

Unfortunately, this energy is discarded as heat by braking resistors.
Just replace those braking resistors with the R1000 to effectively use the energy that you have been throwing away.
After you've already tried everything else to save energy, let the R1000 show you a new way.

Power Regenerative Unit

R1000

Reuse the Previously Wasted Energy with a New Way to Save Energy

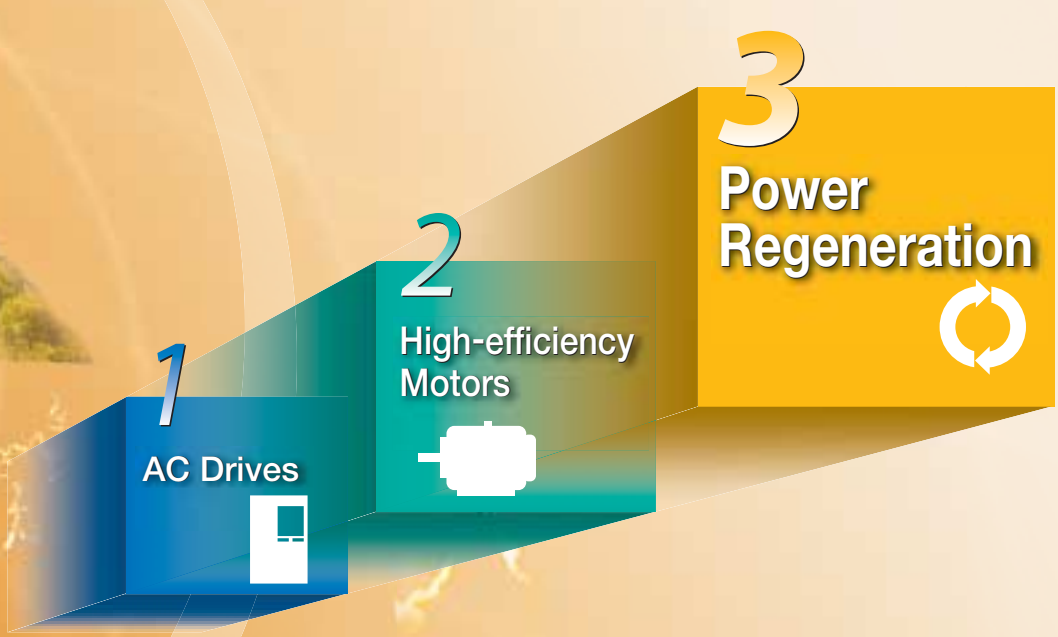

Save electricity with power regeneration!

More Braking Power!

Machine Downsizing!

Total Cost Reduction!

CONTENTS

Features 4

Application Examples 6

Applicable Models 7

Standard Specifications 8

Selecting the Capacity 9

Connection Diagram 10

Terminal Functions 11

Dimensions 12

Fully-Enclosed Design 16

Options 18

Application Notes 22

Global Service Network 23

Save Even More Energy!

Add the R1000 to save even more energy.

Application to a Lift

54% Energy Savings

(Conditions)
Rated load : 10 t
Rated lifting speed : 20 m/min
Motor used : 45 kW, 4 poles, 1,750 min^{-1}
No. of lifting/lowering : 25 times/h; 109,500/yr (12 h/day for 365 days)
Electricity costs : $10/kWh

Replacing Braking Resistors

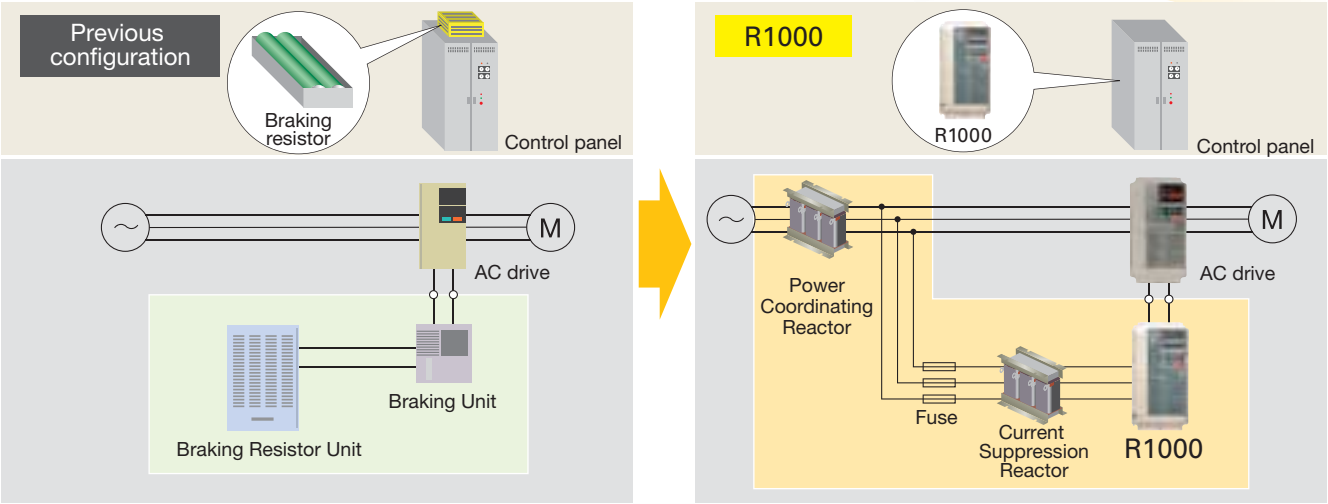

Machines Generate Energy!

Effectively use this energy to save energy!

Did you know? When a motor turns, it consumes energy.
But when it is turned by something else, it generates energy.

■ Lifts, such as cranes

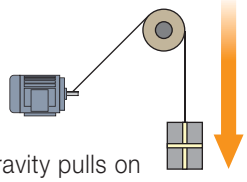

Gravity pulls on the motor when the load is lowered.

Generates energy!

■ Horizontal conveyors, such as dollies

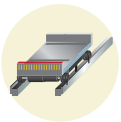

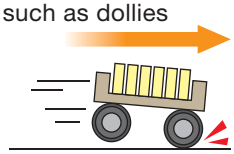

Inertia pulls on the motor when the dolly decelerates or is stopped.

Generates energy!

■ Generators, such as windmills and waterwheels

Wind, water, or another external force turns a motor.

Generates energy!

More Braking Power!

Increased braking torque provides more braking power with continuous regenerative operation.

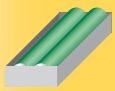

Previous configuration
Example for LKEB4045
125%(10s)

Using the R1000...

R1000

150%(30s)
High Braking Torque

Let Us Meet Your Needs

Energy Savings That You Can See

Visualizing Savings in Electricity

You can use analog outputs and communications networks to easily and visually monitor all sorts of data.
Operation is as easy as for a Yaskawa 1000-series AC drive.

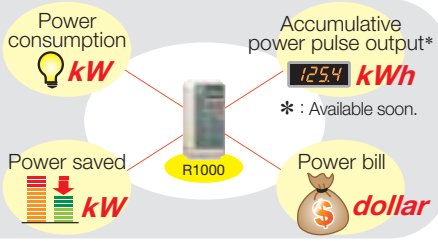

Reliable and Long Life

Ten Years of Durable Performance

Cooling fans, capacitors, and relays have been carefully selected and designed for a life expectancy of up to ten years.*

* : Assumes the drive is running continuously for 24 hours a day at 80% load, and with an ambient temperature of 40℃ in the case of an open-chassis model.

Preventive Maintenance

Performance Life Monitors

The R1000 outputs a signal to the control device indicating components may need to be replaced.

The R1000 is equipped with performance life monitors that notify the user of part wear and maintenance periods to prevent problems before they occur.

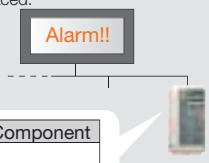

Operator Display	Corresponding Component
LT-1	Cooling fan
LT-2	Capacitors
LT-3	Inrush prevention relay

No Need to Worry Should Problems Occur

Terminal Board with a Parameter Backup Function

The terminal block's ability to save parameter setting data makes it a breeze to get the application back online in the event of a failure requiring unit replacement.

Parameter

Name	Number	Setting
Run Command Selection 1	b1-02	2
Multi-function Analog Inputs(Voltage), Terminal A1 Function Selection	H3-02	10

Easy Support from a PC

Simulation Program for Regeneration Effects

Depreciation simulation gives you an easy way to confirm the cost efficiency of the R1000.

DriveWizard Plus

An indispensable tool for R1000 setup and maintenance.

We Support Global Business

Compliance with Global Standards

CE c UL us

RoHS compliant
Restriction of Hazardous Substances Directive

Note: Application pending.

Support for Field Networks

RS-422/RS-485 communications capability with the MEMOBUS/Modbus protocol is a standard feature. And you can mount communications options cards to enable using the main open field networks.

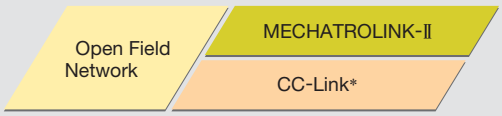

* : Available soon.

Application Examples

Saving Energy with Power Regeneration!
Ideal for Machines That Use Braking Resistors.

Conveyance Equipment

Cranes, Hoists, and Chain Blocks

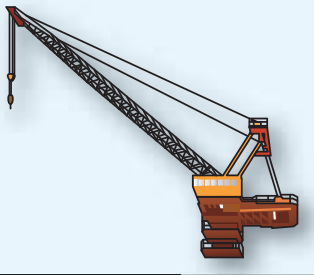

Elevators

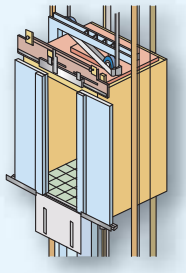

Stacking Cranes (Automated Warehouses)

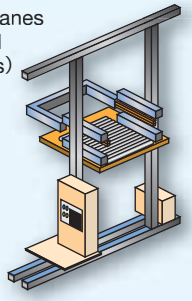

Escalators

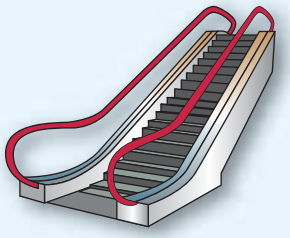

Automated Vertical Storage System

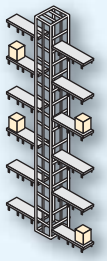

Slope Transportation Systems (Monorails and Cable Cars)

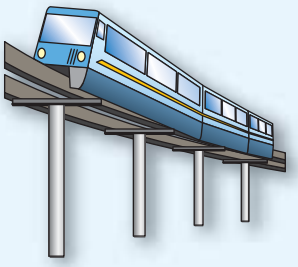

Automatic Parking System

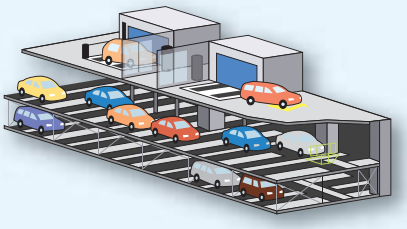

Robots

Robots

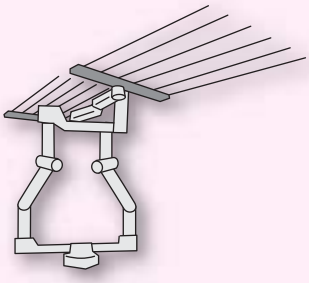

Textiles

Weaving Machines

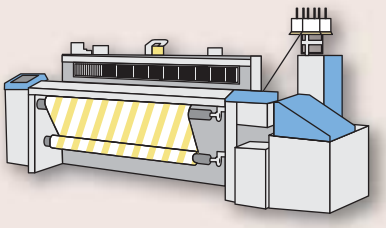

Metal Fabrication

Presses

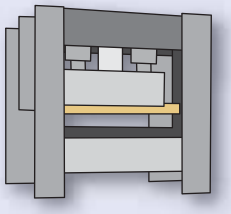

Chemical Plants

Centrifugal Separators, Decanters

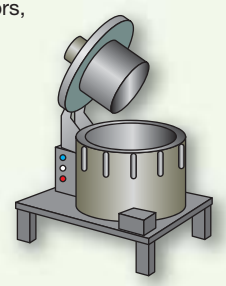

Food Processing

Mixers

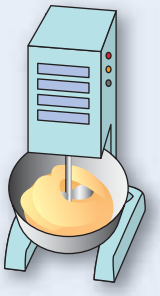

Paper Manufacturing and Printers

Winders and Unwinders

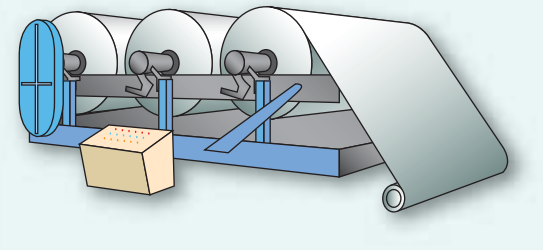

Slitters

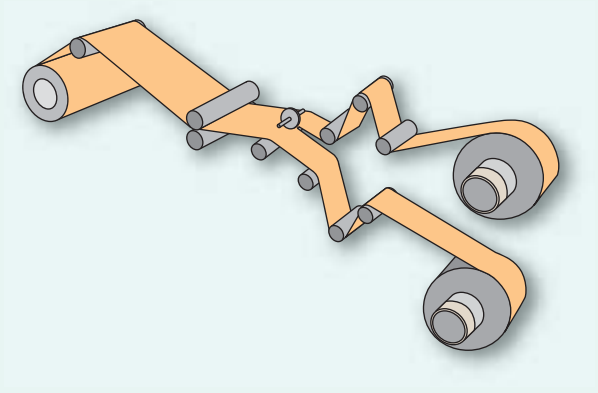

Other

Ladle Turrets

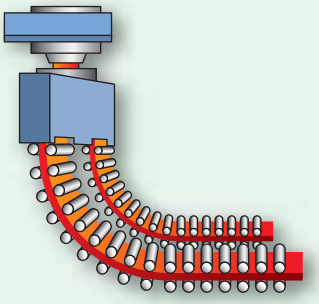

Machine Tools

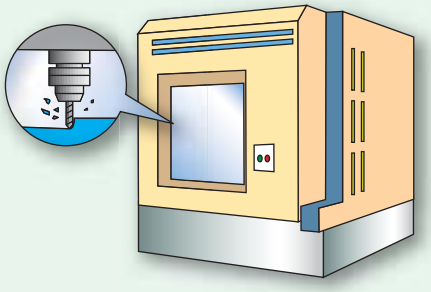

Applicable Models

The following AC drives and AC Servo drives are recommended. The R1000 can be connected to existing products.

High performance vector control
A1000

Compact vector control
V1000

Compact V/f control
J1000

High-function fully vector control
Varispeed G7

Elevator applications
L1000A

AC servo drives
Σ-VSERIES

Standard Specifications

R1000 Energy-saving Unit

Voltage			200 V Class												400 V Class															
Model CIMR-RA∗ A			03P5	0005	0007	0010	0014	0017	0020	0028	0035	0053	0073	0105	03P5	0005	0007	0010	0014	0017	0020	0028	0035	0043	0053	0073	0105	0150	0210	0300
Max. Applicable Motor Capacity kW			3.7	5.5	7.5	11	15	18.5	22	30	37	55	75	110	3.7	5.5	7.5	11	15	18.5	22	30	37	45	55	75	110	160	220	315
Rating	Regeneration Capacity kW		3.5	5	7	10	14	17	20	28	35	53	73	105	3.5	5	7	10	14	17	20	28	35	43	53	73	105	150	210	300
	Rated Output Current (DC) A		14	20	27	41	55	68	81	112	138	207	282	413	7	11	15	22	30	36	43	58	73	89	109	149	217	320	440	629
	Rated Input Current (AC) A		10	15	20	30	41	50	60	83	102	153	209	306	5	8	11	16	22	27	32	43	54	66	81	110	161	237	326	466
Input	Rated Voltage/Rated Frequency		200 to 240Vac 50/60Hz												380 to 480Vac 50/60Hz															
	Allowable Voltage Fluctuation		−15 to +10%																											
	Allowable Frequency Fluctuation		±2%																											
Control Characteristics	Control Method		120° excitation method																											
	Input Power Factor		0.9 min. (for rated load)																											
	Overload Protection		30 s at approx. 150% of rated current.																											
	Regenerative Torque		150% 30 s, 100% 25% ED 60 s, 80% continuous																											
	Main Control Functions		Cooling Fan on/off Switch, Removable Terminal Block with Parameter Backup, MEMOBUS/Modbus Comm. (RS-422/RS-485 max, 115.2 kbps)																											
Protection Functions	Momentary Overcurrent Protection		Operation stops for approx. 250% or higher of the rated power supply current.																											
	Fuse burnout		Operation stops if the fuse burns out.																											
	Overloads		Operation stops for 150% of the rated power supply current for 30 s.																											
	Overvoltage Protection	Output	Stops when DC bus voltage exceeds approx. 410 Vdc												Stops when DC bus voltage exceeds approx. 820 Vdc															
		Input	Stops when input voltage exceeds approx. 227 Vac												Stops when input voltage exceeds approx. 554 Vac															
	Undervoltage Protection	Output	Stops when DC bus voltage falls below approx. 190 Vdc												Stops when DC bus voltage falls below approx. 380 Vdc															
		Input	Stops when input voltage falls below approx. 150 Vac												Stops when input voltage falls below approx. 300 Vac															
	Momentary Power Loss		Immediately stops after Momentary Power Loss is detected.																											
	Power Supply Frequency Fault		Operation stops for a deviation of ±6 Hz or more from the rated input frequency.																											
	Heatsink Overheat Protection		Protection by thermistor																											
	Charge LED		Charge LED remains lit until DC bus has fallen below approx. 50 V																											
Environment	Area of Use		Indoors (Protected from corrosive gases and dust)																											
	Ambient Temperature		−10 to +40°C (NEMA1, UL Type1), −10 to +50°C (IP00, IP20)																											
	Humidity		95% RH or less (no condensation)																											
	Shock		(2A03P5 to 2A0053, 4A03P5 to 4A0073)10 to 20 Hz : 9.8 m/s², 20 to 55 Hz : 5.9 m/s² (2A0073 to 2A0105, 4A0105 to 4A0300)10 to 20 Hz : 9.8 m/s², 20 to 55 Hz : 2.0 m/s²																											
	Storage Temperature		−20 to +60°C (short-term temperature during transportation)																											
	Altitude		Up to 1000 meters (derating required at altitudes from 1000 to 3000 m)																											
Protection Design			Open Type enclosure (IP00) Enclosed Wall-Mounted (IP20/NEMA1, UL Type1)∗2																											
Safety Standard			UL508C, IEC/EN61800-5-1, IEC/EN61800-3																											

∗1 : This number indicates the voltage class (2: 200 V class, 4: 400 V class).
∗2 : IP20 protection applies if the top cover is removed from a NEMA Type1 Unit (CIMR-RA2A03P5 to CIMR-RA2A0028 or CIMR-RA4A03P5 to CIMR-RA4A0028).

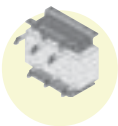

R1000 Standard Configuration Devices

Voltage		200 V Class												400 V Class															
Model CIMR-RA∗ A		03P5	0005	0007	0010	0014	0017	0020	0028	0035	0053	0073	0105	03P5	0005	0007	0010	0014	0017	0020	0028	0035	0043	0053	0073	0105	0150	0210	0300
Power Coordinating Reactor	Rated Current A	20	30	40	60	80	90	120	160	200	280	360	500	10	15	20	30	40	50	60	80	90	120	150	200	250	330	490	660
	Inductance mH	0.53	0.35	0.265	0.18	0.13	0.12	0.09	0.07	0.05	0.038	0.026	0.02	2.2	1.42	1.06	0.7	0.53	0.42	0.36	0.26	0.24	0.18	0.15	0.11	0.09	0.06	0.04	0.03
Current Suppression Reactor	Rated Current A	15	15	20	40	40	50	60	80	100	153	209	306	7.5	7.5	10	15	25	25	30	40	50	60	75	100	161	237	326	466
	Inductance mH	0.31	0.31	0.15	0.1	0.1	0.06	0.05	0.04	0.03	0.02	0.015	0.01	1.2	1.2	0.6	0.4	0.3	0.3	0.2	0.15	0.12	0.1	0.08	0.06	0.04	0.03	0.02	0.013
Fuse	Rated Current A	20	25	32	50	63	80	100	125	160	200	350	500	16	16	16	25	40	40	50	63	80	100	125	160	250	350	500	630

∗ : This number indicates the voltage class (2: 200 V class, 4: 400 V class).

R1000 Capacity Selection

Easy Selection

The recommended R1000 models are given in the following table.

200 V Class

Motor Capacity (kW) / Drive Capacity (kW)		3.7 or less	5.5	7.5	11	15	18.5	22	30	37	45	55	75	90	110
R1000 Mode CIMR-RA2A □□□□	03P5	●	–	–	–	–	–	–	–	–	–	–	–	–	–
	0005	–	●	–	–	–	–	–	–	–	–	–	–	–	–
	0007	–	–	●	–	–	–	–	–	–	–	–	–	–	–
	0010	–	–	–	●	–	–	–	–	–	–	–	–	–	–
	0014	–	–	–	–	●	–	–	–	–	–	–	–	–	–
	0017	–	–	–	–	–	●	–	–	–	–	–	–	–	–
	0020	–	–	–	–	–	–	●	–	–	–	–	–	–	–
	0028	–	–	–	–	–	–	–	●	–	–	–	–	–	–
	0035	–	–	–	–	–	–	–	–	●	–	–	–	–	–
	0053	–	–	–	–	–	–	–	–	–	●	●	–	–	–
	0073	–	–	–	–	–	–	–	–	–	–	–	●	–	–
	0105	–	–	–	–	–	–	–	–	–	–	–	–	●	●

400 V Class

Motor Capacity (kW) / Drive Capacity (kW)		3.7 or less	5.5	7.5	11	15	18.5	22	30	37	45	55	75	90	110	132	160	185	220	315
R1000 Mode CIMR-RA4A □□□□	03P5	●	–	–	–	–	–	–	–	–	–	–	–	–	–	–	–	–	–	–
	0005	–	●	–	–	–	–	–	–	–	–	–	–	–	–	–	–	–	–	–
	0007	–	–	●	–	–	–	–	–	–	–	–	–	–	–	–	–	–	–	–
	0010	–	–	–	●	–	–	–	–	–	–	–	–	–	–	–	–	–	–	–
	0014	–	–	–	–	●	–	–	–	–	–	–	–	–	–	–	–	–	–	–
	0017	–	–	–	–	–	●	–	–	–	–	–	–	–	–	–	–	–	–	–
	0020	–	–	–	–	–	–	●	–	–	–	–	–	–	–	–	–	–	–	–
	0028	–	–	–	–	–	–	–	●	–	–	–	–	–	–	–	–	–	–	–
	0035	–	–	–	–	–	–	–	–	●	–	–	–	–	–	–	–	–	–	–
	0043	–	–	–	–	–	–	–	–	–	●	–	–	–	–	–	–	–	–	–
	0053	–	–	–	–	–	–	–	–	–	–	●	–	–	–	–	–	–	–	–
	0073	–	–	–	–	–	–	–	–	–	–	–	●	–	–	–	–	–	–	–
	0105	–	–	–	–	–	–	–	–	–	–	–	–	●	●	–	–	–	–	–
	0150	–	–	–	–	–	–	–	–	–	–	–	–	–	–	●	●	–	–	–
	0210	–	–	–	–	–	–	–	–	–	–	–	–	–	–	–	–	●	●	–
	0300	–	–	–	–	–	–	–	–	–	–	–	–	–	–	–	–	–	–	●

Optimum Selection

Use the DriveSelect Inverter Capacity Selection Program to make the selection.
You can download the application for free from Yaskawa's product and technical information website (http://www.e-mechatronics.com/en/).
Depending on the amount of regenerated energy, you can select an R1000 with a smaller capacity than the drive.
Select the power coordinating reactor according to the motor capacity.

Model Number Key

CIMR- R A 2 A 0105 A A A

YASKAWA Energy-Saving Unit — R1000 Series — Design Revision Order

No.	Region Code
A	Japan

No.	Voltage Class
2	3-phase, 200-240 Vac
4	3-phase, 380-480 Vac

No.	Customized Specifications
A	Standard model

No.	Enclosure Type
A	IP00 open-chassis
F	IP20/NEMA1, UL Type1 enclosure panel

No.	Environmental Specifications
A	Standard
K	Gas-resistant
M	Humidity and dust-resistant
S	Vibration-resistant

Note: Contact a Yaskawa for more on environmental specifications.

Three-Phase 200 V

No.	Regeneration Capacity (kW)
03P5	3.5
0005	5
0007	7
0010	10
0014	14
0017	17
0020	20
0028	28
0035	35
0053	53
0073	73
0105	105

Three-Phase 400 V

No.	Regeneration Capacity (kW)
03P5	3.5
0005	5
0007	7
0010	10
0014	14
0017	17
0020	20
0028	28
0035	35
0043	43
0053	53
0073	73
0105	105
0150	150
0210	210
0300	300

Standard Connection Diagram

Model: CIMR-RA2A03P5 to 0105, CIMR-RA4A03P5 to 0300

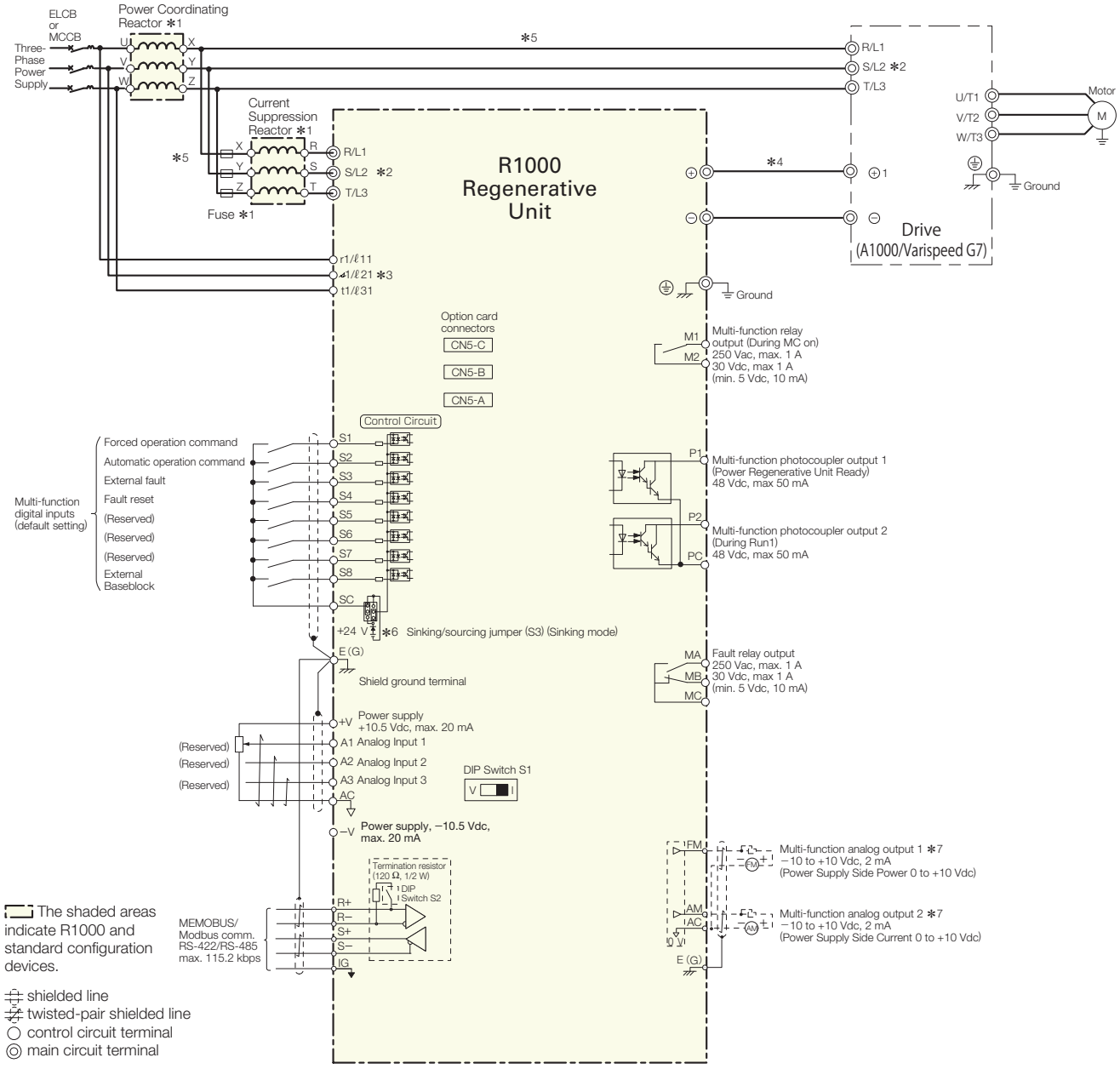

∗1 : Always use the specified AC reactor and fuses to avoid abnormal operations.
∗2 : Always wire the drive's AC power supply terminals (R/L1, S/L2, and T/L3) from the secondary side of the power coordinating reactor.
∗3 : Always wire the R1000's power supply voltage/phase detection circuits (r1/ℓ11, 1/ℓ21, and t1/ℓ31) from the primary side of the power coordinating reactor.
∗4 : The DC current bus bar wiring between R1000 and the drive (between terminals ⊕1 and ⊕, terminals ⊖ and ⊖) must be within 5 m.
∗5 : The wiring between the power coordinating reactor and drive and between the power coordinating reactor and R1000 must be within 10 m.
∗6 : This figure shows an example of a sequence input to S1 through S8 using a non-powered relay or an NPN transistor (0 V common/sink mode: default). Set either sinking or sourcing with the sinking/sourcing jumpers (S3).
∗7 : Monitor outputs work with devices such as wattmeters. Do not use these outputs in a feedback loop.

Terminal Functions

R1000 Energy-saving Unit

Main Circuit Terminals

Terminal	Type	Function
R/L1,S/L2,T/L3	Main circuit power supply inputs	These are the power supply input terminals that connect to the input reactor.
r1/ℓ11, s1/ℓ21,t1/ℓ31	Power supply voltage detection inputs	These terminals are to detect the power supply voltage order and voltage levels.
⊖	DC voltage inputs	These terminals are used to input a DC voltage.
⊕		
⏚	Grounding terminal	For 200 V class: 100 Ω or less For 400 V class: 10 Ω or less

Control Circuit Input Terminals (200 V/400 V Class)

Terminal Type	Terminal	Terminal Name (Default Setting)	Function (Signal Level)
Multi-Function Digital Inputs	S1	Multi-function selection input 1 (Forced operation command)	Photocoupler 24 Vdc, 8 mA The factory setting is for Sinking Mode. Use the sinking/sourcing mode jumper (S3) to change the sinking/sourcing mode setting to select an internal or external power supply.
	S2	Multi-function selection input 2 (Automatic operation command)	
	S3	Multi-function selection input 3 (External fault)	
	S4	Multi-function selection input 4 (Fault reset)	
	S5	Multi-function selection input 5 (Reserved)	
	S6	Multi-function selection input 6 (Reserved)	
	S7	Multi-function selection input 7 (Reserved)	
	S8	Multi-function selection input 8 (External Baseblock)	
	SC	Multi-function selection input common	
Analog Inputs	A1	–	–
	A2	–	–
	A3	–	–
	AC	–	–
	E (G)	Ground for shielded lines and option cards	–
Fault Relay Output	MA	N.O. output (Fault)	Relay output 30 Vdc, 10 mA to 1 A 250 Vac, 10 mA to 1 A MB N.C. output Minimum load: 5 Vdc, 10 mA
	MB	N.C. output (Fault)	
	MC	Fault output common	
Multi-Function Digital Output*1	M1	Multi-function digital output(During MC on)	Default setting:During MC on The M1-M2 terminals close during operation.
	M2		
Multi-Function Photocoupler Output	P1	Photocoupler output 1 (Power Regenerative Unit Ready)	Photocoupler output*2 48 V, 2 to 50 mA
	P2	Photocoupler output 2 (During run 1)	
	PC	Photocoupler output common	
Monitor Output	FM	Analog monitor output1	–10 to +10 Vdc, or 0 to +10 Vdc
	AM	Analog monitor output2	
	AC	Monitor common	0 V

*1 : Do not assign functions to terminals M1 and M2 that involve frequent switching, unless absolutely necessary, because doing so may shorten the relay performance life. The switching life is estimated at 200,000 times (1 A, resistive load).
*2 : Connect a flywheel diode as shown when driving a reactive load such as a relay coil. The diode must be rated for use of a voltage higher than the circuit voltage.

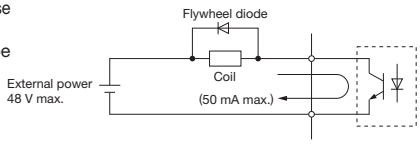

Serial Communication Terminals (200 V/400 V Class)

Type	No.	Signal Name	Function (Signal Level)	
MEMOBUS/ Modbus Communications*	R+	Communications input (+)	MEMOBUS/Modbus communications: Use an RS-422 or RS-485 cable to connect the unit.	RS-422/RS-485 MEMOBUS/Modbus communications protocol 115.2 kbps (max.)
	R–	Communications input (–)		
	S+	Communications output (+)		
	S–	Communications output (–)		
	IG	Shield ground	0 V	

* : Enable the termination resistor in the last unit in a MEMOBUS/Modbus network by setting DIP switch S2 to the ON position.

R1000 Standard Configuration Devices

Power Coordinating Reactor

Terminal	Type	Function
U	Power coordinating reactor inputs	These terminals are connected to the power supply.
V		
W		
X	Power coordinating reactor outputs	These terminals are connected to the connected drive device input terminals and input fuses.
Y		
Z		

Current Suppression Reactor

Terminal	Type	Function
X	Current suppression reactor inputs	These terminals are connected to the input fuses.
Y		
Z		
R	Current suppression reactor outputs	These terminals are connected to the R1000 Power Regenerative Unit.
S		
T		

R1000 Energy-saving Unit

Enclosures

Voltage Class	200 V Class												400 V Class															
Model CIMR-RA*1A□□□□	03P5	0005	0007	0010	0014	0017	0020	0028	0035	0053	0073	0105	03P5	0005	0007	0010	0014	0017	0020	0028	0035	0043	0053	0073	0105	0150	0210	0300
Max. Applicable Motor Capacity kW	3.7	5.5	7.5	11	15	18.5	22	30	37	55	75	110	3.7	5.5	7.5	11	15	18.5	22	30	37	45	55	75	110	160	220	315
Regeneration Capacity kW	3.5	5	7	10	14	17	20	28	35	53	73	105	3.5	5	7	10	14	17	20	28	35	43	53	73	105	150	210	300
Open-Chassis (IP00)	Remove top cover of wall-mount enclosure for IP20 rating								IP00 standard				Remove top cover of wall-mount enclosure for IP20 rating								IP00 standard							
Enclosure Panel (IP20/NEMA1, UL Type1)	Standard								Made to order			＊2	Standard								Made to order						＊2	

＊1 : This number indicates the voltage class (2: 200 V class, 4: 400 V class).
＊2 : Not available

■Open-Chassis【IP00】

Dimensions (mm)

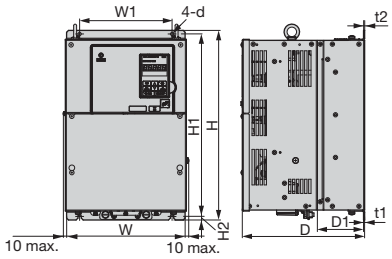

200 V Class

Model CIMR-RA2A□□□□□□	Regeneration Capacity kW	Dimensions (mm)										Weight (kg)	Cooling
		W	H	D	W1	H1	H2	D1	t1	t2	d		
0035	35	275	450	258	220	435	7.5	100	2.3	2.3	M5	21	Fan cooled
0053	53	325	550	283	260	535	7.5	110	2.3	2.3	M6	33	
0073	73	450	705	330	325	680	12.5	130	3.2	3.2	M10	62	
0105	105	500	800	350	370	773	13	130	4.5	4.5	M12	81	

400 V Class

Model CIMR-RA4A□□□□□□	Regeneration Capacity kW	Dimensions (mm)										Weight (kg)	Cooling
		W	H	D	W1	H1	H2	D1	t1	t2	d		
0035	35	275	450	258	220	435	7.5	100	2.3	2.3	M6	20	Fan cooled
0043	43												
0053	53	325	550	283	260	535	7.5	110	2.3	2.3	M6	33	
0073	73												
0105	105	450	705	330	325	680	12.5	130	3.2	3.2	M10	62	
0150	150												
0210	210	500	800	350	370	773	13	130	4.5	4.5	M12	85.6	
0300	300											87	

■Enclosure Panel【IP20/NEMA1, UL Type1】

Dimensions (mm)

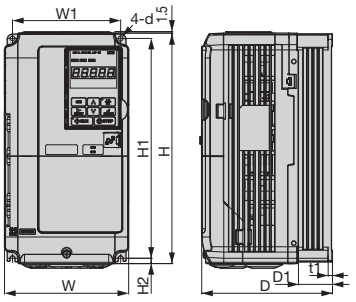

Figure1

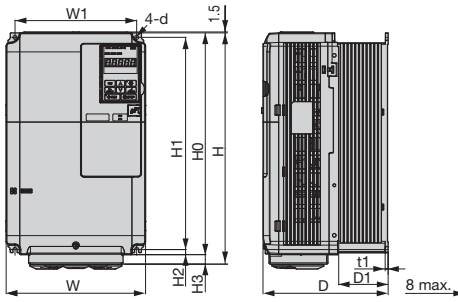

Figure2

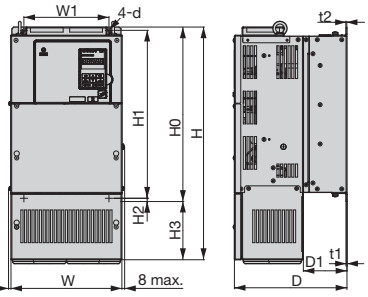

Figure3

200 V Class

Model CIMR-RA2A□□□□	Regeneration Capacity kW	Figure	Dimensions (mm)												Weight (kg)	Cooling
			W	H	D	W1	H0	H1	H2	H3	D1	t1	t2	d		
03P5	3.5	1	140	260	167	122	–	248	6	–	55	5	–	M5	4	Fan cooled
0005	5															
0007	7															
0010	10		180	300	187	160	–	284	8	–	75	5	–	M5	6	
0014	14															
0017	17	2	220	365	197	192	350	335	8	15	78	5	–	M6	9	
0020	20															
0028	28		220	385	197	192	350	335	8	35	78	5	–	M6	9	
0035	35	3	275	450	258	220	450	435	7.5	65	100	2.3	2.3	M6	22	
0053	53		329	730	283	260	550	535	7.5	180	110	2.3	2.3	M6	36	
0073	73		450	705	330	325	705	680	12.5	255	130	3.2	3.2	M10	70	

400 V Class

Model CIMR-RA4A□□□□	Regeneration Capacity kW	Figure	Dimensions (mm)												Weight (kg)	Cooling
			W	H	D	W1	H0	H1	H2	H3	D1	t1	t2	d		
03P5	3.5	1	140	260	167	122	–	248	6	–	55	5	–	M5	4	Fan cooled
0005	5															
0007	7															
0010	10		180	300	187	160	–	284	8	–	75	5	–	M5	5	
0014	14															
0017	17	2	220	365	197	192	350	335	8	15	78	5	–	M6	8	
0020	20															
0028	28															
0035	35	3	275	450	258	220	450	435	7.5	65	100	2.3	2.3	M6	21	
0043	43															
0053	53		329	730	283	260	550	535	7.5	180	110	2.3	2.3	M6	37	
0073	73															
0105	105		450	705	330	325	705	680	12.5	255	130	3.2	3.2	M10	70	
0150	150															

Combinations of Standard Configuration Devices

Power Coordinating Reactor

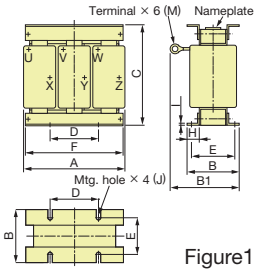

Figure1

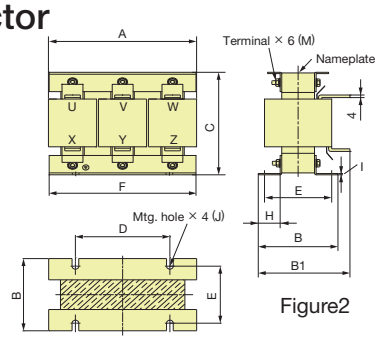

Figure2

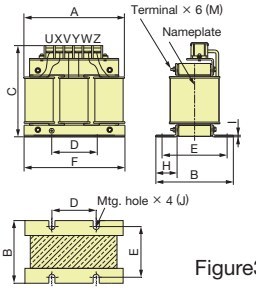

Figure3

Voltage Class	Model CIMR-RA∗1A□	Code No.	Qty.	Figure	Dimensions (mm) A∗2	B∗2	B1∗2	C∗2	D∗3	E∗4	F	H	I	J	M	Weight (kg)
200 V Class	03P5	100-133-584	1	1	130	90	114	110	50	65	129	24	4.5	M6	M5	3.5
	0005	100-133-585			130	90	119	110	50	70	129	23.5	4.5	M6	M5	4.5
	0007	100-133-586			130	100	139	110	50	75	129	24	4.5	M6	M6	4.8
	0010	100-133-587			160	107	147.5	135	75	85	159	25	4.5	M6	M6	7
	0014	100-133-588			180	102	155	155	75	80	179	25	4.5	M6	M8	8
	0017	100-133-589			180	102	150	155	75	80	179	25	4.5	M6	M8	8.5
	0020	100-133-590			180	102	155	155	75	80	179	25	4.5	M6	M10	9
	0028	100-133-591			210	102	170	180	75	80	209	25	4.5	M6	M10	12
	0035	100-133-592			210	117	184.5	180	75	95	205	25	3	M6	M10	16
	0053	100-107-364		2	190	107	150	245	70	90	189	21.5	3	M8	M10	18
	0073	100-107-365			240	107	150	290	80	90	230	26.5	3	M8	M10	26
	0105	100-107-366			265	117	155	275	90	100	250	31.5	3	M8	M10	28
400 V Class	03P5	100-107-367	1	3	130	90	–	123	50	65	129	23	2	M6	M4	3.5
	0005	100-107-368			130	100	–	123	50	75	129	23	2	M6	M4	4.5
	0007	100-107-369		1	160	92	117	135	75	70	159	25	3	M6	M5	6.2
	0010	100-107-370			160	107	134.5	135	75	85	159	25	3	M6	M5	7
	0014	100-107-371			180	102	142	155	75	80	179	25	3	M6	M6	9
	0017	100-107-372			180	102	147	155	75	80	179	25	3	M6	M6	9.5
	0020	100-107-373			180	97	149.5	155	75	75	179	22.5	3	M6	M6	9.5
	0028	100-107-374			210	102	152	180	75	80	204	25	3	M6	M8	13
	0035	100-107-375			210	117	179.5	180	75	95	204	25	3	M6	M8	18
	0043	100-107-376			240	128	195	210	150	110	239	25	3	M8	M10	23
	0053	100-107-377			240	128	200	210	150	110	239	25	3	M8	M10	25
	0073	100-107-378			270	164	233	235	150	130	259	40	3	M8	M10	34
	0105	100-107-379		2	270	164	200	235	150	130	260	41	3	M8	M10	35
	0150	100-107-380			285	170	211	255	160	140	275	43	4	M10	M10	45
	0210	100-107-381			320	160	211	310	180	130	315	40	4	M10	M12	55
	0300	100-107-382			320	197	239.5	345	180	160	315	45.5	4	M12	M12	73

∗1: This number indicates the voltage class (2: 200 V class, 4: 400 V class). ∗2: Maximum dimension including tolerance. ∗3: Tolerance: ±1 ∗4: Tolerance: ±2

Current Suppression Reactor

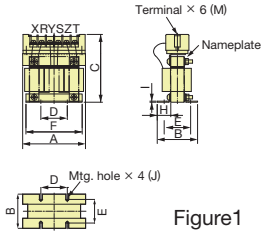

Figure1

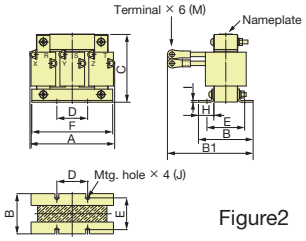

Figure2

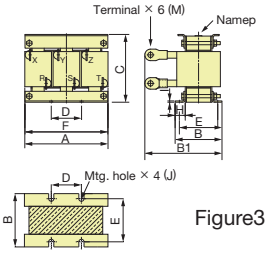

Figure3

Voltage Class	Model CIMR-RA∗1A□	Code No.	Figure	Dimensions (mm) A∗2	B∗2	B1∗2	C∗2	D∗3	E∗4	F	H	I	J	M	Weight (kg)
200 V Class	03P5	100-133-594	1	96	63	—	104	40	40	85	20	1.6	M5	M4	1.5
	0005	100-133-594		96	63	—	104	40	40	85	20	1.6	M5	M4	1.5
	0007	100-133-595		96	63	—	104	40	40	85	20	1.6	M5	M4	1.5
	0010	100-133-596	2	120	73	112	95	40	50	105	20	2.3	M6	M6	2.5
	0014	100-133-596		120	73	112	95	40	50	105	20	2.3	M6	M6	2.5
	0017	100-133-597		120	73	122	95	40	50	105	20	2.3	M6	M6	2.5
	0020	100-133-598		120	73	122	95	40	50	105	20	2.3	M6	M6	2.5
	0028	100-133-599	3	131	90	136.8	110	50	70	130	22	3.2	M6	M8	3
	0035	100-133-600		131	90	142	110	50	70	—	22	3.2	M6	M8	3
	0053	100-107-397		161	91	151	130	75	70	—	25	2.3	M6	M10	5.1
	0073	100-107-398		161	101	166	130	75	80	—	25	2.3	M6	M12	6.6
	0105	100-107-399		181	101	178.5	155	75	85	—	25	2.3	M6	M12	9
400 V Class	03P5	100-107-390	1	96	63	—	104	40	40	85	20	1.6	M5	M4	1.5
	0005	100-107-390		96	63	—	104	40	40	85	20	1.6	M5	M4	1.5
	0007	100-107-391		96	63	—	104	40	40	85	20	1.6	M5	M4	1.5
	0010	100-107-392		96	63	—	104	40	40	85	20	1.6	M5	M4	1.5
	0014	100-107-393	2	120	73	112	95	40	50	105	20	2.3	M6	M5	2.5
	0017	100-107-393		120	73	112	95	40	50	105	20	2.3	M6	M5	2.5
	0020	100-107-394		120	73	112	95	40	50	105	20	2.3	M6	M5	2.5
	0028	100-107-395		120	73	117	95	40	50	105	20	2.3	M6	M6	2.5
	0035	100-107-400		131	90	135	110	50	70	—	22	3.2	M6	M6	3
	0043	100-107-401		131	100	143	110	50	80	—	22	3.2	M6	M6	4
	0053	100-107-402	3	161	91	138	130	75	70	—	25	2.3	M6	M8	5
	0073	100-107-403		161	91	146	130	75	70	—	25	2.3	M6	M8	5
	0105	100-107-404		181	101	171	155	75	85	—	25	2.3	M6	M10	9
	0150	100-107-405		215	108	181.5	170	75	85	205	25	3.2	M6	M12	15.1
	0210	100-107-406		215	118	197.2	175	75	95	205	25	3.2	M6	M12	17
	0300	100-107-407		241	128	248	215	150	110	—	25	3.2	M8	M12	25

∗1: This number indicates the voltage class (2: 200 V class, 4: 400 V class). ∗2: Maximum dimension including tolerance. ∗3: Tolerance: ±1 ∗4: Tolerance: ±2

Fuse/ Fuse Holder

Fuse

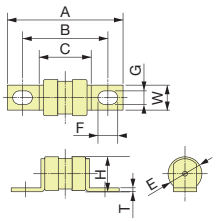

Figure1

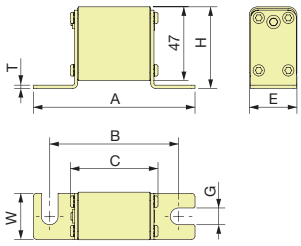

Figure2

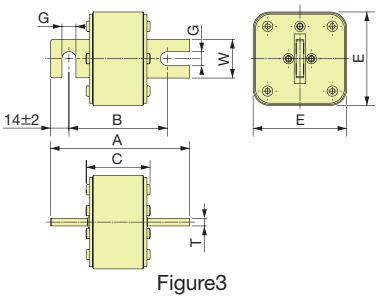

Figure3

Fuse Holder

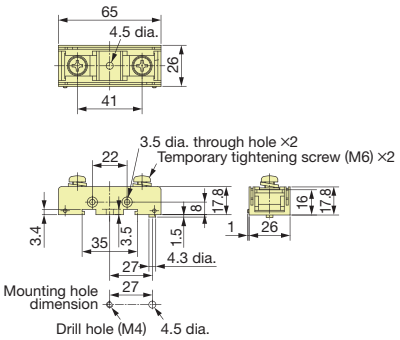

Figure4

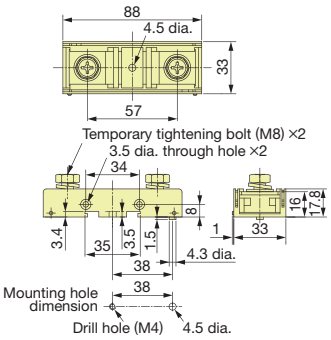

Figure5

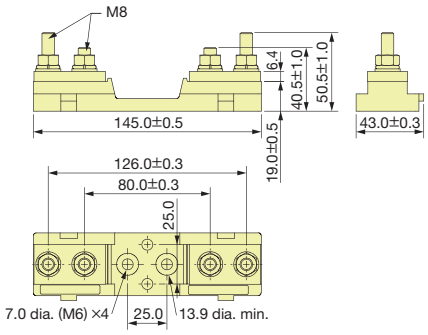

Figure6

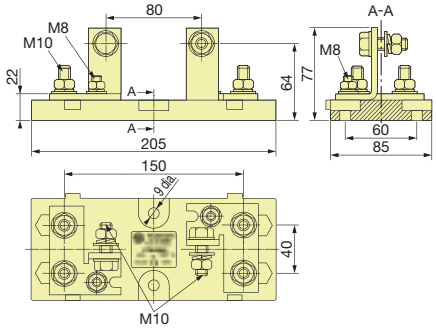

Figure7

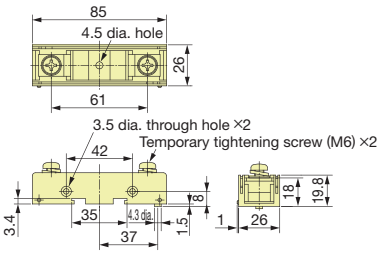

Figure8

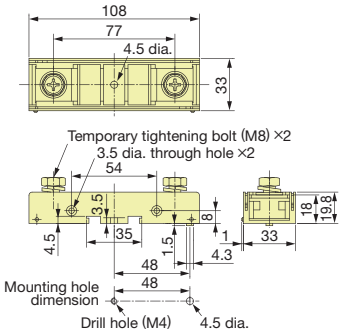

Figure9

200 V Class

Model CIMR-RA2A□	Fuse													Fuse Holder			
	Model	Qty.	Code No. (Three fuses are included with one code No.)	Figure	Dimensions (mm)									Model	Qty.	Code No. (Three fuses are included with one code No.)	Figure
					A	B	C	E	F	G	H	W	T				
03P5	350GH-20ULTC	3	100-133-602	1	55	41	25	18.5	9.5	6.5	18	12	2	HT4017	3	100-133-612	4
0005	350GH-25ULTC		100-133-603		55	41	25	18.5	9.5	6.5	18	12	2				
0007	350GH-32ULTC		100-133-604		55	41	25	18.5	9.5	6.5	18	12	2				
0010	350GH-50ULTC		100-133-605		55	41	25	18.5	9.5	6.5	18	12	2				
0014	350GH-63ULTC		100-133-606		55	41	25	18.5	9.5	6.5	18	12	2				
0017	350GH-80ULTC		100-133-607		55	41	25	18.5	9.5	6.5	18	12	2				
0020	350GH-100ULTC		100-133-608		55	41	25	18.5	9.5	6.5	18	12	2				
0028	350GH-125ULTC		100-133-609		78	57	29	25	14	9	26	20	3	HT5723		100-133-613	5
0035	350GH-160ULTC		100-133-610		78	57	29	25	14	9	26	20	3				
0053	350GH-200ULTC		100-110-431		78	57	29	25	14	9	26	20	3				
0073	170M2620		100-110-432	2	98	78	52.5	30	—	10	49	28	2	170H1007		100-110-543	6
0105	170M3021		100-110-433	3	110	78	50	43	—	11	—	20	6	170H3003		100-107-417	7

400 V Class

Model CIMR-RA4A□	Fuse													Fuse Holder			
	Model	Qty.	Code No. (Three fuses are included with one code No.)	Figure	Dimensions (mm)									Model	Qty.	Code No. (Three fuses are included with one code No.)	Figure
					A	B	C	E	F	G	H	W	T				
03P5	660GH-16ULTC	3	100-107-427	1	76.5	61	46	17.5	9.5	6.5	19	12	2	HT6017	3	100-107-411	8
0005	660GH-16ULTC		100-107-427		76.5	61	46	17.5	9.5	6.5	19	12	2				
0007	660GH-16ULTC		100-107-427		76.5	61	46	17.5	9.5	6.5	19	12	2				
0010	660GH-25ULTC		100-107-428		76.5	61	46	17.5	9.5	6.5	19	12	2				
0014	660GH-40ULTC		100-107-429		76.5	61	46	17.5	9.5	6.5	19	12	2				
0017	660GH-40ULTC		100-107-429		76.5	61	46	17.5	9.5	6.5	19	12	2				
0020	660GH-50ULTC		100-107-430		76.5	61	46	17.5	9.5	6.5	19	12	2				
0028	660GH-63ULTC		100-107-431		76.5	61	46	17.5	9.5	6.5	19	12	2				
0035	660GH-80ULTC		100-110-434		76.5	61	46	17.5	9.5	6.5	19	12	2				
0043	660GH-100ULTC		100-107-432		76.5	61	46	17.5	9.5	6.5	19	12	2				
0053	660GH-125ULTC		100-107-436		98	77.8	50	23.5	14	9	26	20	3	HT7723		100-107-415	9
0073	660GH-160ULTC		100-107-437		98	77.8	50	23.5	14	9	26	20	3				
0105	170M1371		100-110-435	2	100	78	54	21	—	8	40	20	2	170H1007		100-110-543	6
0150	170M2620		100-110-432		98	78	52.5	30	—	10	49	28	2				
0210	170M3021		100-110-433	3	110	78	50	43	—	11	—	20	6	170H3003		100-107-417	7
0300	170M4016		100-107-441		109	78	51	74	—	11	—	30	6				

Fully-Enclosed Design

An Open-Chassis model can be installed in a fully-enclosed panel.

An open-chassis model in a protective enclosure with the heatsink inside the panel allows for an intake air temperature of up to 50˚C. The heatsink can alternatively be mounted outside the enclosure panel. This reduces the amount of heat inside the panel and requires less space for installation. In this case, an intake air temperature of up to 40˚C is allowed. Current derating or other steps to ensure cooling are required at 50˚C.

・Cooling Design for Fully-Closed Enclosure Panel

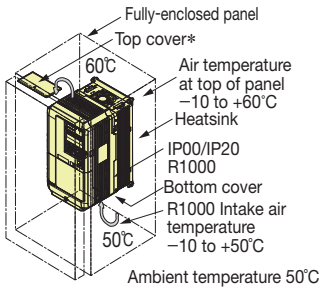

・Mounting the External Heatsink

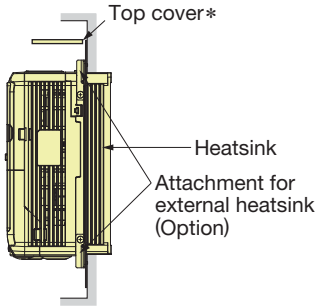

∗: Enclosure panel (CIMR-RA2A03P5 to 0028, CIMR-RA4A03P5 to 0028) can be installed with the top and bottom covers removed.

・Ventilation Space

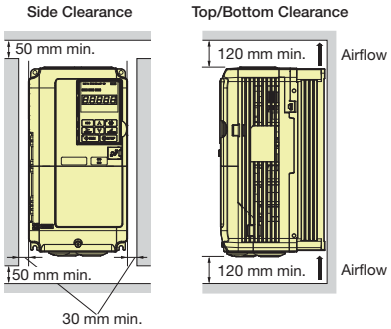

If you use a R1000 with model numbers CIMR-RA2A0035 to 0105, CIMR-RA4A0035 to 0300 mounted in a panel, provide space for the hoisting eye bolts on both sides of the unit and for main circuit wiring.

Watt Loss Data

R1000 Energy-saving Unit

200 V Class

Model CIMR-RA2A□□□□□□		03P5	0005	0007	0010	0014	0017	0020	0028	0035	0053	0073	0105
Regeneration Capacity kW		3.5	5	7	10	14	17	20	28	35	53	73	105
Rated Output Current (DC) A		14	20	27	41	55	68	81	112	138	207	282	413
Heat Loss∗ W	Heatsink	31	51	76	99	149	155	201	270	295	494	609	910
	Internal	22	27	33	39	49	53	67	98	127	164	236	365
	Total Heat Loss	53	78	109	138	198	208	268	368	422	658	845	1275

400 V Class

Model CIMR-RA4A□□□□□□		03P5	0005	0007	0010	0014	0017	0020	0028	0035	0043	0053	0073	0105	0150	0210	0300
Regeneration Capacity kW		3.5	5	7	10	14	17	20	28	35	43	53	73	105	150	210	300
Rated Output Current (DC) A		7	11	15	22	30	36	43	58	73	89	109	149	217	320	440	629
Heat Loss∗ W	Heatsink	16	27	41	53	80	91	114	174	169	221	266	397	572	869	1193	1534
	Internal	21	24	28	31	38	44	50	66	74	91	109	164	255	336	532	630
	Total Heat Loss	37	51	69	84	118	135	164	240	243	312	375	561	827	1205	1725	2164

∗ : The heat loss is for an 80% continuous regenerative torque.

Standard Configuration Devices

200 V Class

Model CIMR-RA2A□□□□□□		03P5	0005	0007	0010	0014	0017	0020	0028	0035	0053	0073	0105
Heat Loss W	Power Coordinating Reactor	30	45	40	65	75	90	90	100	100	94	120	170
	Current Suppression Reactor	22	22	21	32	32	31	35	48	46	50	65	85
	Fuse	1.0	1.5	2.3	3.5	5.7	6.4	5.8	8.9	11.2	14.4	35.9	44.3

400 V Class

Model CIMR-RA4A□□□□□□		03P5	0005	0007	0010	0014	0017	0020	0028	0035	0043	0053	0073	0105	0150	0210	0300
Heat Loss W	Power Coordinating Reactor	40	50	40	65	60	90	90	95	100	130	112	138	154	169	210	300
	Current Suppression Reactor	21	21	19	23	36	36	33	40	46	56	81	72	95	105	120	160
	Fuse	0.8	1.2	1.7	3.1	4.5	5.9	7.0	10.3	14.3	18.0	19.9	30.3	29.8	47.8	51.1	77.9

Attachment for External Heatsink

Additional attachments are required for R1000 with model numbers CIMR-RA2A03P5 to 0028, CIMR-RA4A03P5 to 0028.
The final product will be wider and taller than the unit.
Additional attachments are not required for CIMR-RA2A0035 and above, and CIMR-RA4A0035 and above.
Note: Contact Yaskawa for information on attachments for earlier models.

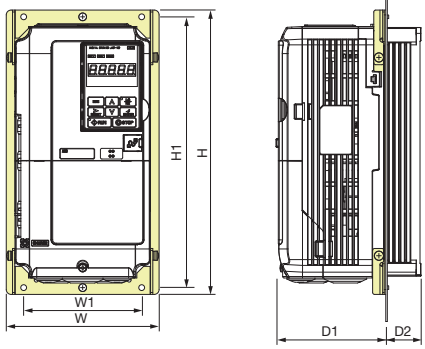

200 V Class

Model CIMR-RA2A□	Dimensions (mm)						Code No.
	W	H	W1	H1	D1	D2	
03P5	158	294	122	280	112	53.4	EZZ020800B
0005							
0007							
0010	198	329	160	315	112	73.4	EZZ020800C
0014							
0017	238	380	192	362	119	76.4	EZZ020800D
0020							
0028							

400 V Class

Model CIMR-RA4A□	Dimensions (mm)						Code No.
	W	H	W1	H1	D1	D2	
03P5	158	294	122	280	112	53.4	EZZ020800B
0005							
0007							
0010	198	329	160	315	112	73.4	EZZ020800C
0014							
0017	238	380	192	362	119	76.4	EZZ020800D
0020							
0028							

Panel Modification for External Heatsink

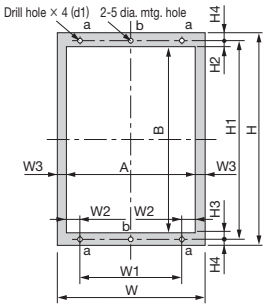

Modification Figure 1

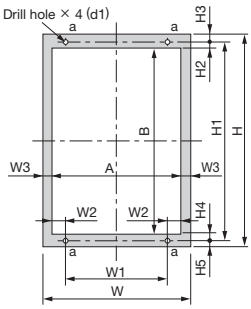

Modification Figure 2

200 V Class

Model CIMR-DA2A□	Modification Figure	Dimensions (mm)												
		W	H	W1	W2	W3	H1	H2	H3	H4	H5	A	B	d1
03P5	1	158	294	122	9	9	280	8.5	8.5	7	—	140	263	M5
0005														
0007														
0010		198	329	160	10	9	315	17.5	10.5	7	—	180	287	M5
0014														
0017		238	380	192	14	9	362	13	8	9	—	220	341	M6
0020														
0028														
0035	2	275	450	220	19.5	8	435	8	7.5	8	7.5	259	419	M6
0053		325	550	260	24.5	8	535	8	7.5	8	7.5	309	519	M6
0073		450	705	325	54.5	8	680	12.5	12.5	12.5	12.5	434	655	M10
0105		500	800	370	57	8	773	16	14	17	13	484	740	M12

400 V Class

Model CIMR-DA4A□	Modification Figure	Dimensions (mm)												
		W	H	W1	W2	W3	H1	H2	H3	H4	H5	A	B	d1
03P5	1	158	294	122	9	9	280	8.5	8.5	7	—	140	263	M5
0005														
0007														
0010		198	329	160	10	9	315	17.5	10.5	7	—	180	287	M5
0014														
0017		238	380	192	14	9	362	13	8	9	—	220	341	M6
0020														
0028														
0035	2	275	450	220	19.5	8	435	8	7.5	8	7.5	259	419	M6
0043														
0053		325	550	260	24.5	8	535	8	7.5	8	7.5	309	519	M6
0073														
0105		450	705	325	54.5	8	680	12.5	12.5	12.5	12.5	434	655	M10
0150														
0210		500	800	370	57	8	773	16	14	17	13	484	740	M12
0300														

Options

Name	Purpose	Model, Manufacturer	Page
24 V Power Supply	Provides power supply for the control circuit and option boards. Note: Parameter settings cannot be changed when the drive is operating solely from this power supply.	PS-A10LB (200 V class) PS-A10HB (400 V class)	19
USB Copy Unit (RJ-45/USB compatible plug)	·Can copy parameter settings easily and quickly to be later transferred to another drive. ·Adapter for connecting R1000 to the USB port of a PC.	JVOP-181	21
PC Cable	Connect R1000 and PC when using DriveWizard Plus. The cable length must be 3 m or less.	Commercially available USB2.0 A/B cable.	21
LCD Operator	For easier operation when using the optional LCD operator. Allows for remote operation. Includes a Copy function for saving the settings of R1000.	JVOP-180	20
LCD Operator Extension Cable	Cable for connecting the LCD operator.	WV001 : 1 m WV003 : 3 m	20
Attachment for External Heatsink	Required for heatsink installation. Note: Current derating may be needed when using a heatsink.	—	17

Option Cards

Type		Name	Model	Function	Manual No.
Built-in Type (connected to connector)	Communications Option Card	MECHATROLINK-Ⅱ Interface	SI-T3	Used for running or stopping the R1000, setting or referencing parameters, and monitoring input current, output voltage, or similar items through MECHATROLINK-Ⅱ communication with the host controller.	TOBPC73060050 SIEPC73060061
		CC-Link Interface	Available soon	Used for running or stopping the R1000, setting or referencing parameters, and monitoring input current, input voltage, or similar items through CC-Link communication with the host controller.	—
	Monitor Option Card	Analog Monitor	AO-A3	Outputs analog signal for monitoring the output state (input current, input voltage etc.) of the R1000. · Output resolution: 11 bit signed (1/2048) · Output voltage: 0 to 10 Vdc (non-isolated) · Terminals: 2 analog outputs	TOBPC73060040
		Digital Output	DO-A3	Outputs isolated type digital signal for monitoring the run state of the R1000 (alarm signal, during run, etc.) ·Terminals: 6 photocoupler outputs (48 V, 50 mA or less) 2 relay contact outputs (250 Vac, 1 A or less 30 Vdc, 1 A or less)	TOBPC73060041

Note: 1. Each communication option card requires a separate configuration file to link to the network.
2. The option cards are RoHS compliant.

24 V Power Supply

The 24 V Power Supply Option maintains R1000 control circuit power in the event of a main power outage. The control circuit keeps the network communications and I/O data operational in the event of a power outage. It supplies external power to the control circuit only.

Note: Even if a back-up power supply is used for the control circuit, the main circuit must still have power in order to change parameter settings.

Weight: 0.2 kg

The installed option adds 50 mm to the total width of R1000.

Connection Diagram

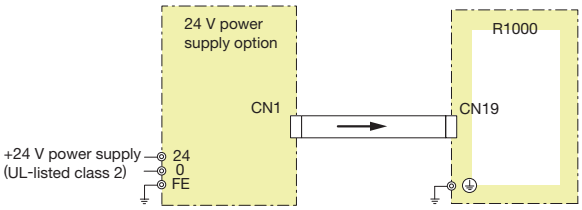

Model	Code No.
200 V Class: PS-A10LB	PS-A10LB
400 V Class: PS-A10HB	PS-A10HB

LCD Operator

An LCD operator with a 6-digit display makes it easy to check the necessary information.
Includes a copy function for saving drive settings.

Model	Code No.
JVOP – 180	100-090-072

Dimensions (mm)

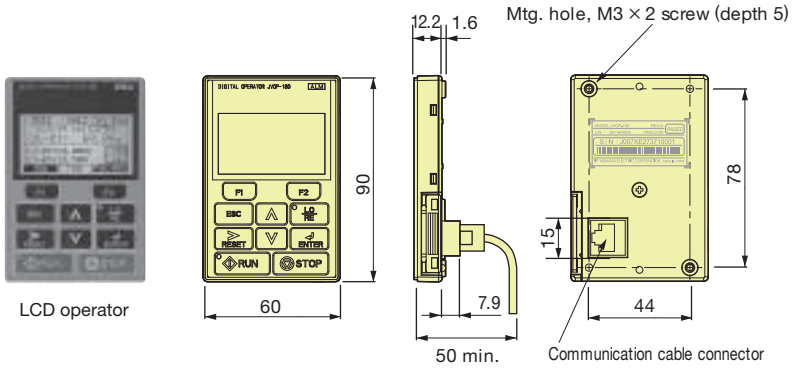

Operator Extension Cable

Enables remote operation.

Model	Code No.
WV001 (1 m)	WV001
WV003 (3 m)	WV003

Note: Do not use this cable for connecting the unit to a PC. Failure to comply may cause damage to the PC.

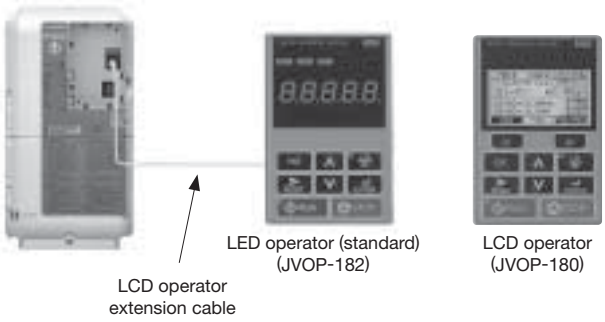

Operator Mounting Bracket

This bracket is required to mount the LED or LCD operator outside an enclosure panel.

Item	Model	Code No.	Installation	Notes
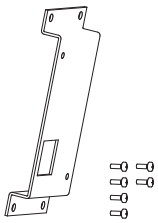 Installation Support Set A	EZZ020642A	100-039-992	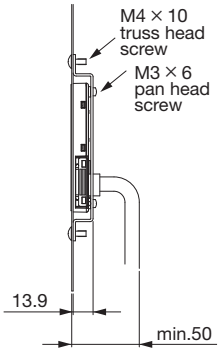	For use with holes through the panel
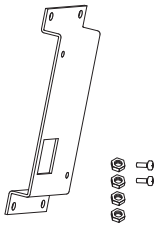 Installation Support Set B	EZZ020642B	100-039-993	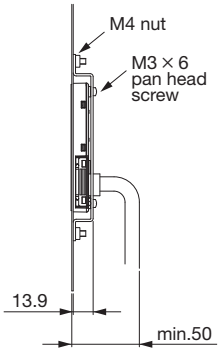	For use with panel mounted threaded studs Note: If weld studs are on the back of the panel, use the Installation Support Set B.

USB Copy Unit (Model: JVOP-181)

Copy parameter settings in a single step, and then transfer those settings to another R1000.
Connects to the RJ-45 port on the R1000 and to the USB port on a PC.

Connection

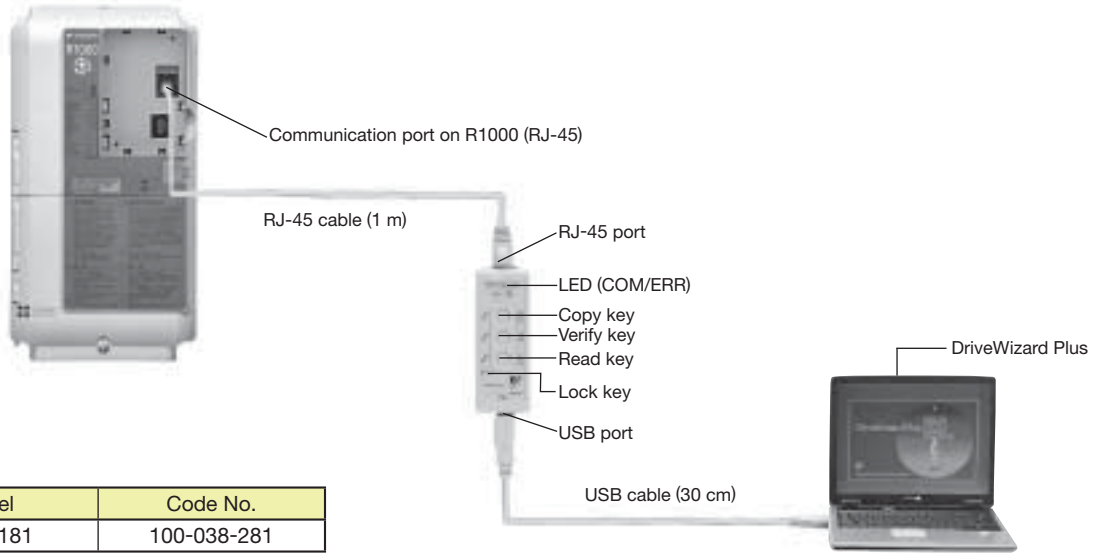

Connecting to a PC

Model	Code No.
JVOP-181	100-038-281

Note: JVOP-181 is a set consisting of a USB copy unit, RJ-45 cable, and USB cable.

Note: 1. You can also use a commercially available USB 2.0 cable (with A-B connectors) for the USB cable.
2. No USB cable is needed to copy parameters to other units.

Specifications

Item	Specifications	
Port	LAN (RJ-45) Connect to the R1000.	
	USB (Ver.2.0 compatible) Connect to the PC as required.	
Power Supply	Supplied from a PC or the R1000.	
Operating System	OS compatible with 32-bit memory	Windows 2000
		Windows XP
	OS compatible with 32-bit and 64-bit memory	Windows 7
Memory	Memorizes the parameters for one R1000.	
Dimensions	30 (W) × 80 (H) × 20 (D) mm	
Accessories	RJ-45 Cable (1 m), USB Cable (30 cm)	

Note: 1. Parameters can only be saved to the R1000 when the voltage class, capacity, control mode, and software version match.
2. Requires a driver for the USB copy unit JVOP-181. You can download the driver for free from Yaskawa's product and technical information website (http://www.e-mechatronics.com).
3. Parameter copy function disabled when connected to a PC.

PC Cable

Cable used to connect R1000 to a PC with DriveWizard Plus or DriveWorksEZ installed.
Use a commercially available USB 2.0 cable (A-B connectors, 3 m max.).

Connection

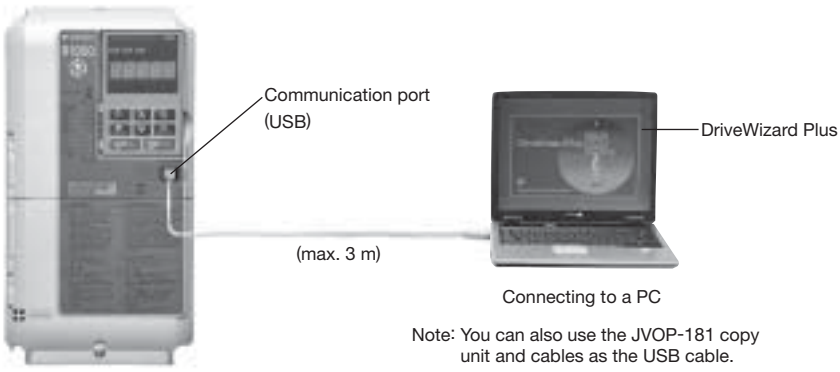

Connecting to a PC

Note: You can also use the JVOP-181 copy unit and cables as the USB cable.

Note: 1. DriveWizard Plus is a PC software package for managing parameters and functions in Yaskawa drives and energy-saving units. You can download the driver for free from Yaskawa's product and technical information website (http://www.e-mechatronics.com/en/).
2. Requires USB driver. You can download the driver for free from Yaskawa's product and technical information website (http://www.e-mechatronics.com/en/).

Application Precautions

■ **Installation of R1000 Standard Configuration Devices**
You must install both R1000 and the R1000 standard configuration devices.

■ **Replacing Previous Models**
If the peripheral devices for previous models (i.e., the VS-656RC5) are used with the R1000, power coordinating reactors and current suppression reactors can be used. However, use the R1000 exclusive model for fuses and fuse holders.
Refer to installation instructions for details.

■ Use one R1000 for each drive. Never connect more than one drive to one R1000.

■ Connect R1000 to the drive with same maximum applicable motor capacity (Heavy duty rating [HD]).
Refer to p.9 for details.
Depending on the amount of regenerated energy, you can select an R1000 with a smaller capacity than the drive. Use the DriveSelect Inverter Capacity Selection Program to make the selection.

■ Select the power coordinating reactor according to the motor capacity when using an R1000 with a smaller capacity than the drive.

■ Do not connect the R1000 in parallel with any other power regenerative unit.

■ **Panel Installation**
Install R1000 in a clean environment by either selecting an area free of airborne oil mist, corrosive gas, flammable gas, dust, and lint, or install R1000 in a fully-enclosed panel. If you install R1000 in a panel, determine cooling methods and panel dimensions so that the ambient temperature of R1000 is within the allowable temperature range. Do not install R1000 on wood or other inflammable materials.

■ **Installation Direction**
Install R1000 upright on a wall.

■ **Wiring Check**
Do not short the output terminals or apply voltage to output terminals (U/T1, V/T2, W/T3), because this can cause serious damage to R1000.
Be sure to perform a careful check of all sequence wiring and other connections before turning the power on. Make sure there are no short circuits on the control terminals (+V, AC, etc.), because this could damage R1000.

■ **Inspection and Maintenance**
Capacitors in R1000 do not immediately discharge after shutting off the power. After shutting off the power, wait at least the amount of time specified on the unit before touching any components.
Failure to comply may result in injury to personnel from electrical shock. Take proper precautions to prevent burns, because the heatsink of R1000 can get very hot during operation. When replacing the cooling fan, shut off the power to R1000 and wait at least 15 minutes to ensure that the heatsink has cooled down.

■ **Wiring**
Yaskawa recommends using ring terminals on all models. Use only the tools recommended by the terminal manufacturer for crimping.

■ **Transporting and Installation**
- Do not steam clean R1000.
  During transport, keep the unit from coming into contact with salts, fluorine, bromine, phthalate esters, and other such harmful chemicals.
- Carry any standard configuration device or peripheral device in a method suitable for the weight of the device. If the devices are handled incorrectly, they may fall and result in injury or device damage.

■ The R1000 cannot be used with a single-phase power supply. Always use a three-phase power supply.

Peripheral Devices

■ **Installation of Noise Filters**
If you install an input noise filter on the drive, always install it on the primary side of the power coordinating reactor.

■ **Wire Gauges and Wiring Distance**
R1000 phase control can be unstable as a result of voltage loss across a long cable running between the power coordinating reactor and the power supply. Make sure that appropriate wire gauge is used.
The optional LCD operator requires a dedicated cable to connect to R1000. If an analog signal is sent via the input terminals to operate R1000, make sure that the cable between the analog operator and the drive is not longer than 50 m, and that the cable is separated from the main circuit wiring. Use reinforced main circuit and reinforced relay sequence circuitry to prevent inductance from surrounding devices.

Global Service Network

Region	Service Area	Service Location	Service Agency	Telephone/Fax
North America	U.S.A.	Chicago (HQ) Los Angeles San Francisco New Jersey Boston Ohio North Carolina	① YASKAWA AMERICA INC.	Headquarters ☎ +1-847-887-7000 FAX +1-847-887-7310
	Mexico	Mexico City	② PILLAR MEXICANA. S.A. DE C.V.	☎ +52-555-660-5553 FAX +52-555-651-5573
South America	South America	São Paulo	③ YASKAWA ELÉTRICO DO BRASIL LTDA.	☎ +55-11-3585-1100 FAX +55-11-5581-8795
	Colombia	Bogota	④ VARIADORES LTD.A.	☎ +57-1-428-4225 FAX +57-1-428-2173
Europe	Europe, South Africa	Frankfurt	⑤ YASKAWA EUROPE GmbH	☎ +49-6196-569-300 FAX +49-6196-569-398
Asia	Japan	Tokyo, offices nationwide	⑥ YASKAWA ELECTRIC CORPORATION (Manufacturing, sales)	☎ +81-3-5402-4502 FAX +81-3-5402-4580
			⑦ YASKAWA ELECTRIC ENGINEERING CORPORATION (After-sales service)	☎ +81-4-2931-1810 FAX +81-4-2931-1811
	South Korea	Seoul	⑧ YASKAWA ELECTRIC KOREA CORPORATION (Sales)	☎ +82-2-784-7844 FAX +82-2-784-8495
			⑨ YASKAWA ENGINEERING KOREA CORPORATION (After-sales service)	☎ +82-2-3775-0337 FAX +82-2-3775-0338
	China	Beijing, Guangzhou, Shanghai	⑩ YASKAWA ELECTRIC (CHINA) CO., LTD.	☎ +86-21-5385-2200 FAX +86-21-5385-3299
	Taiwan	Taipei	⑪ YASKAWA ELECTRIC TAIWAN CORPORATION	☎ +886-2-2502-5003 FAX +886-2-2505-1280
	Singapore	Singapore	⑫ YASKAWA ELECTRIC (SINGAPORE) PTE. LTD. (Sales)	☎ +65-6282-3003 FAX +65-6289-3003
			⑬ YASKAWA ENGINEERING ASIA-PACIFIC PTE. LTD. (After-sales service)	☎ +65-6282-1601 FAX +65-6382-3668
	Thailand	Bangkok	⑭ YASKAWA ELECTRIC (THAILAND) CO., LTD.	☎ +66-2-017-0099 FAX +66-2-017-0799
	India	Bangalore	⑮ YASKAWA INDIA PRIVATE LIMITED	☎ +91-80-4244-1900 FAX +91-80-4244-1901
	Indonesia	Jakarta	⑯ PT. YASKAWA ELECTRIC INDONESIA	☎ +62-21-2982-6470 FAX +62-21-2982-6471
Oceania	Australia	Contact to service agency in Singapore (⑫ and ⑬).		

R1000

DRIVE CENTER (INVERTER PLANT)
2-13-1, Nishimiyaichi, Yukuhashi, Fukuoka, 824-8511, Japan
Phone 81-930-25-2548 Fax 81-930-25-3431
http://www.yaskawa.co.jp

YASKAWA ELECTRIC CORPORATION
New Pier Takeshiba South Tower, 1-16-1, Kaigan, Minatoku, Tokyo, 105-6891, Japan
Phone 81-3-5402-4502 Fax 81-3-5402-4580
http://www.yaskawa.co.jp

YASKAWA AMERICA, INC.
2121, Norman Drive South, Waukegan, IL 60085, U.S.A.
Phone 1-800-YASKAWA (927-5292) or 1-847-887-7000 Fax 1-847-887-7310
http://www.yaskawa.com

YASKAWA ELÉTRICO DO BRASIL LTDA.
777, Avenida Piraporinha, Diadema, São Paulo, 09950-000, Brasil
Phone 55-11-3585-1100 Fax 55-11-3585-1187
http://www.yaskawa.com.br

YASKAWA EUROPE GmbH
185, Hauptstraβe, Eschborn, 65760, Germany
Phone 49-6196-569-300 Fax 49-6196-569-398
http://www.yaskawa.eu.com

YASKAWA ELECTRIC KOREA CORPORATION
9F, Kyobo Securities Bldg., 26-4, Yeouido-dong, Yeongdeungpo-gu, Seoul, 150-737, Korea
Phone 82-2-784-7844 Fax 82-2-784-8495
http://www.yaskawa.co.kr

YASKAWA ELECTRIC (SINGAPORE) PTE. LTD.
151, Lorong Chuan, #04-02A, New Tech Park 556741, Singapore
Phone 65-6282-3003 Fax 65-6289-3003
http://www.yaskawa.com.sg

YASKAWA ELECTRIC (THAILAND) CO., LTD.
59, 1st-5th Floor, Flourish Building, Soi Ratchadapisek 18, Ratchadapisek Road, Huaykwang, Bangkok 10310, Thailand
Phone: +66-2-017-0099 Fax: +66-2-017-0799
http://www.yaskawa.co.th

PT. YASKAWA ELECTRIC INDONESIA
Secure Building-Gedung B Lantai Dasar & Lantai 1 Jl. Raya Protokol Halim Perdanakusuma, Jakarta 13610, Indonesia
Phone 62-21-2982-6470 Fax 62-21-2982-6471
http://www.yaskawa.co.id/

YASKAWA ELECTRIC (CHINA) CO., LTD.
22F, One Corporate Avenue, No.222, Hubin Road, Shanghai, 200021, China
Phone 86-21-5385-2200 Fax 86-21-5385-3299
http://www.yaskawa.com.cn

YASKAWA ELECTRIC (CHINA) CO., LTD. BEIJING OFFICE
Room 1011, Tower W3 Oriental Plaza, No.1 East Chang An Ave.,
Dong Cheng District, Beijing, 100738, China
Phone 86-10-8518-4086 Fax 86-10-8518-4082

YASKAWA ELECTRIC TAIWAN CORPORATION
9F, 16, Nanking E. Rd., Sec. 3, Taipei, 104, Taiwan
Phone 886-2-2502-5003 Fax 886-2-2505-1280
http://www.yaskawa-taiwan.com.tw

YASKAWA INDIA PRIVATE LIMITED
#17/A, Electronics City, Hosur Road, Bangalore, 560 100 (Karnataka), India
Phone 91-80-4244-1900 Fax 91-80-4244-1901
http://www.yaskawaindia.in

YASKAWA

YASKAWA ELECTRIC CORPORATION

In the event that the end user of this product is to be the military and said product is to be employed in any weapons systems or the manufacture thereof, the export will fall under the relevant regulations as stipulated in the Foreign Exchange and Foreign Trade Regulations. Therefore, be sure to follow all procedures and submit all relevant documentation according to any and all rules, regulations and laws that may apply.

Specifications are subject to change without notice for ongoing product modifications and improvements.

© 2013-2015 YASKAWA ELECTRIC CORPORATION

LITERATURE NO. KAEP C710656 05C <2>-0

Published in Japan December 2015
15-11-21